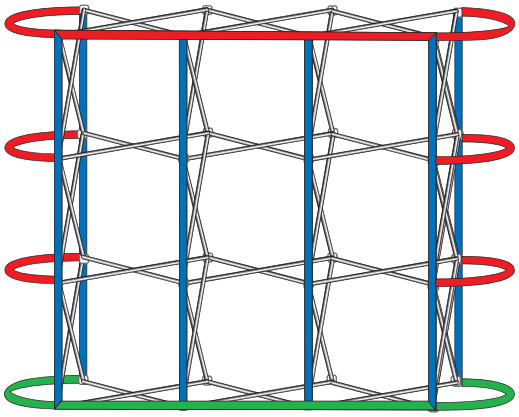

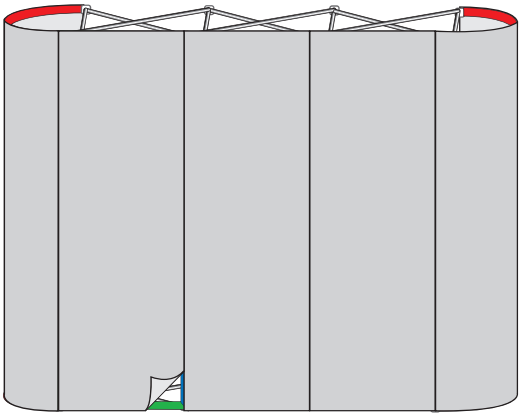

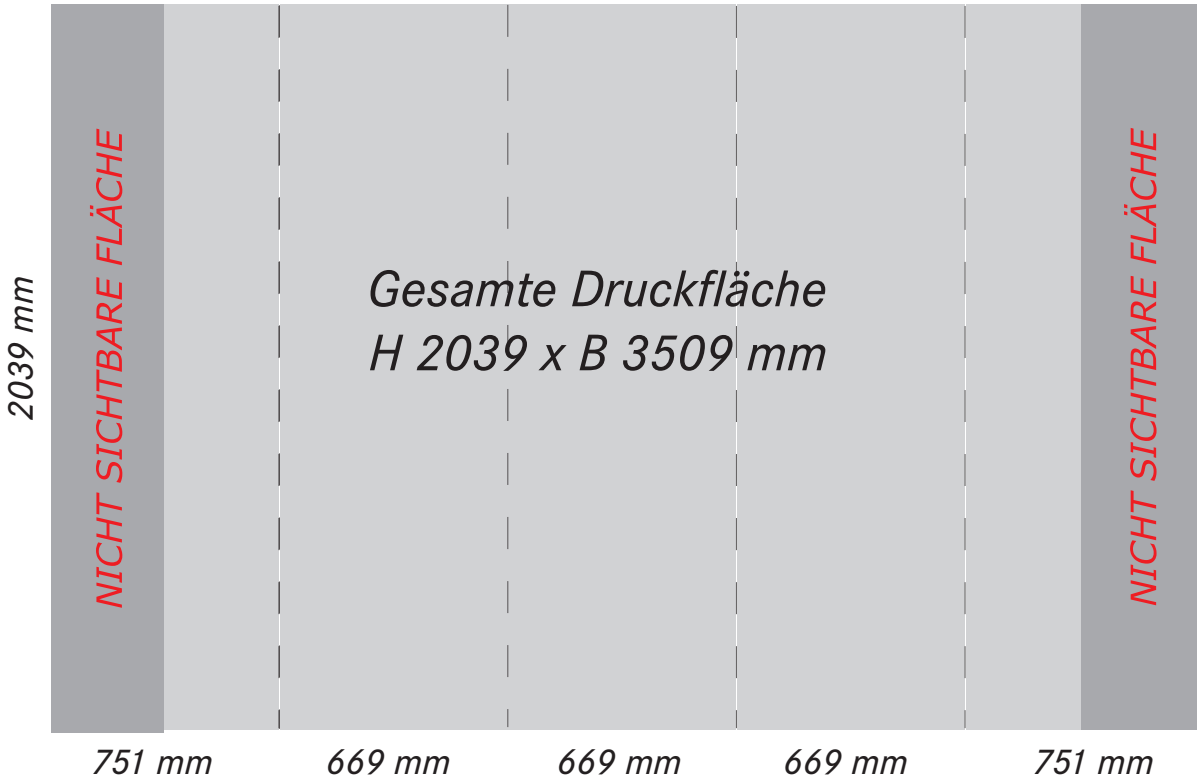

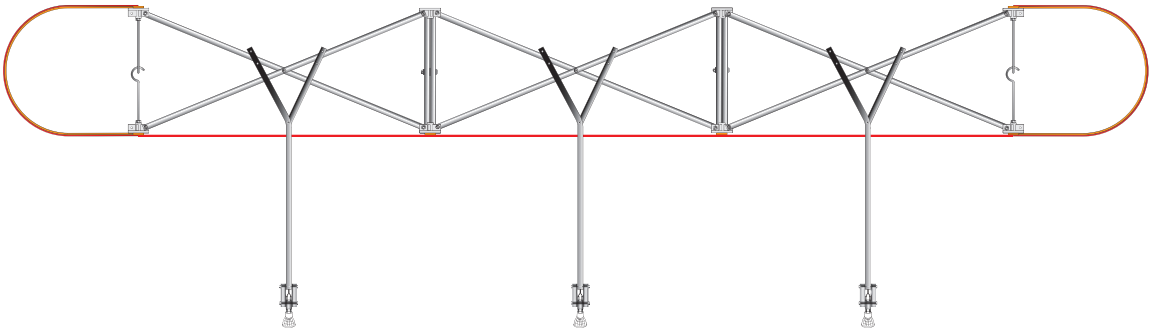

www.posso.de

posso marketing
Lützowstraße 57 • 10785 Berlin
Tel. 0 30 - 236 28 136
Fax 0 30 - 236 28 137 berlin@posso.de

posso marketing GmbH
Herseler Straße 15 • 50389 Wesseling
Tel. 0 22 36 - 88 55 7 - 0
Fax 0 22 36 - 88 55 7 - 99 info@posso.de